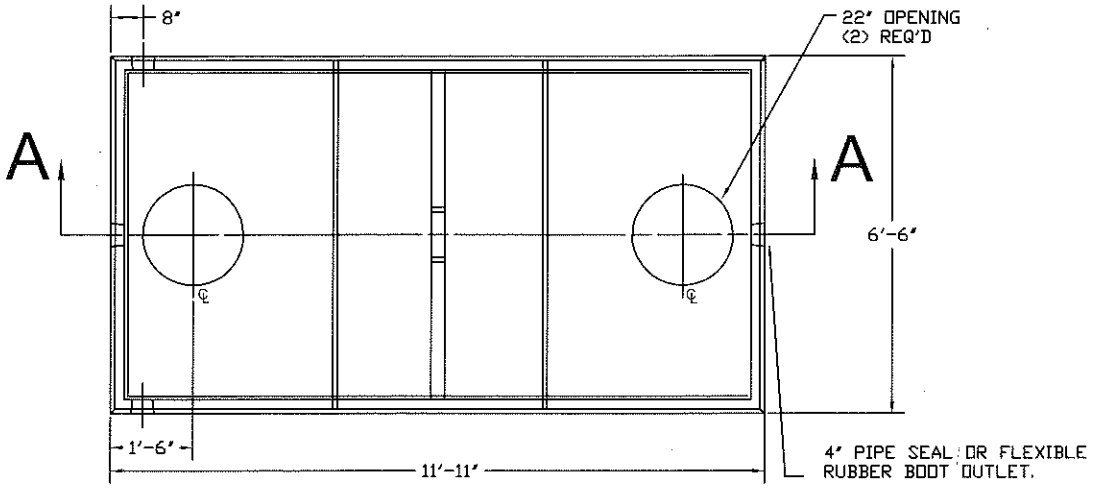

TOP VIEW

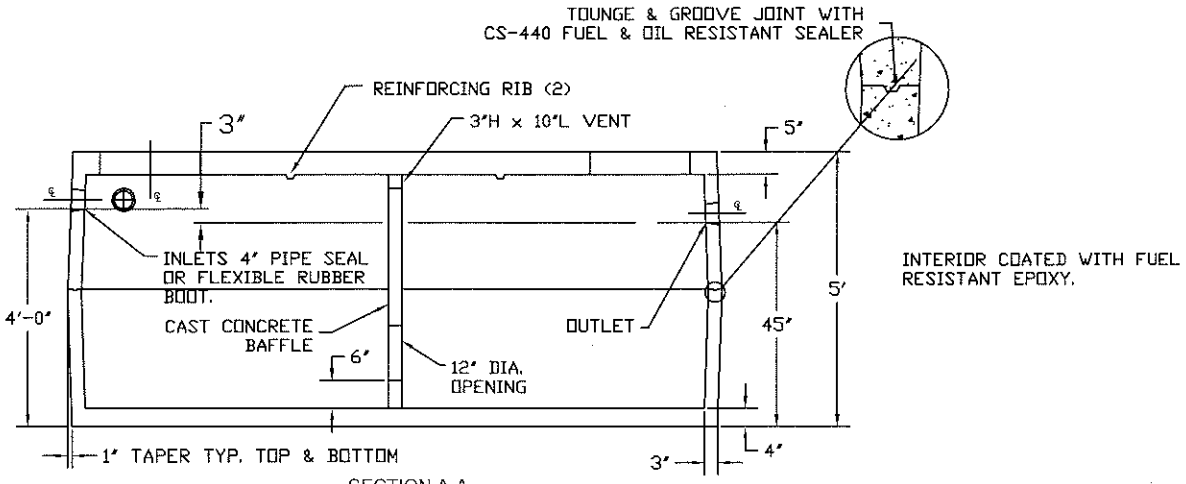

SECTION A-A

NOTES:

1. EXCAVATION MUST BE AT LEAST 12" WIDER & LONGER THAN TANK SIZE.
2. REINFORCED WITH 12.5 GA. 4" X 4" GALVANIZED WIRE & 1/2" RE-ROD.

Bush CONCRETE PRODUCTS, INC.
3584 Airline Road Muskegon, Michigan 49444
231-733-1904 1-800-TOO-BUSH
WWW.BUSHCONCRETEPRODUCTS.COM

1600 Gal. 2 Compartment Oil Separator

SIZE	DATE	DWG NO.	REV
A	12/30/05	001	

DRAWN BY: S. GARABEDIAN

SHEET 1 of 1