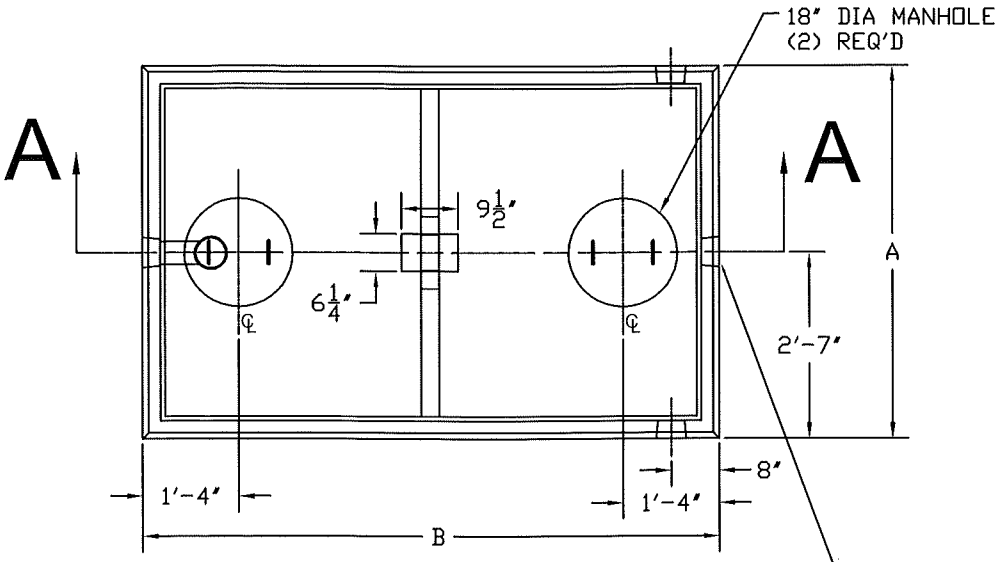

TOP VIEW

ALTERNATE INLETS ø4" - PIPE SEALS (3)

TOUNGE & GROOVE JOINT WITH
POLYPROPYLENE BASED SEALER

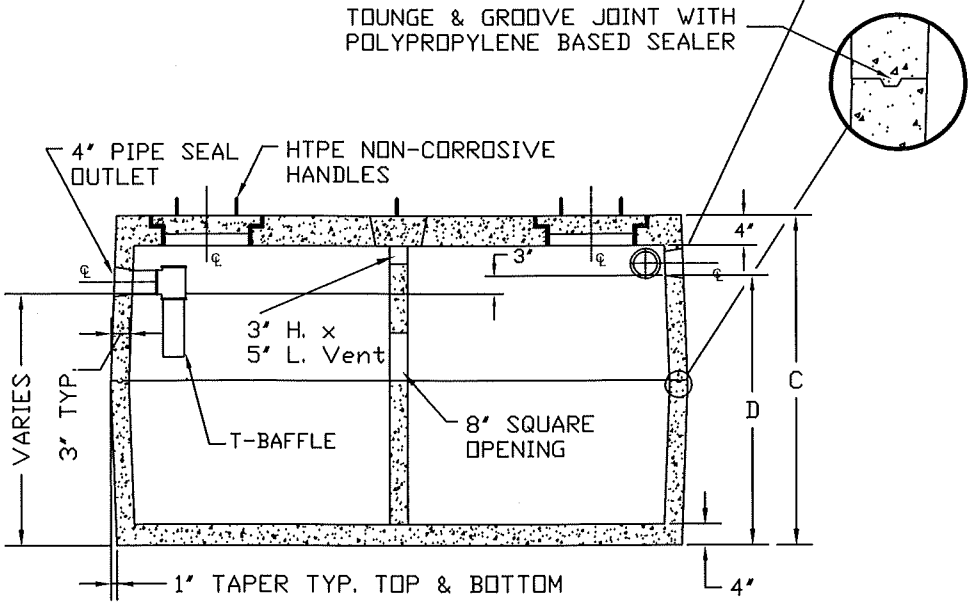

SECTION A-A

NOTES:
1. EXCAVATION MUST BE AT LEAST 12" WIDER & LONGER THAN TANK SIZE.

LIQUID GALS.	A	B	C	D
	WIDTH	LENGTH	HEIGHT	INVERT
1250	62"	96"	75"	65"

Bush
CONCRETE PRODUCTS, INC.
3584 Airline Road Muskegon, Michigan 49444
231-733-1904 1-800-TOO-BUSH
WWW.BUSHCONCRETEPRODUCTS.COM

1250 gal. 2 Compartment SepticTank

SIZE	DATE	DWG NO.	REV
A	12/02/05	006	2/01/12
DRAWN BY: B. BUSH		SHEET 1 of 1	